DIXIE INDUSTRIES

CM

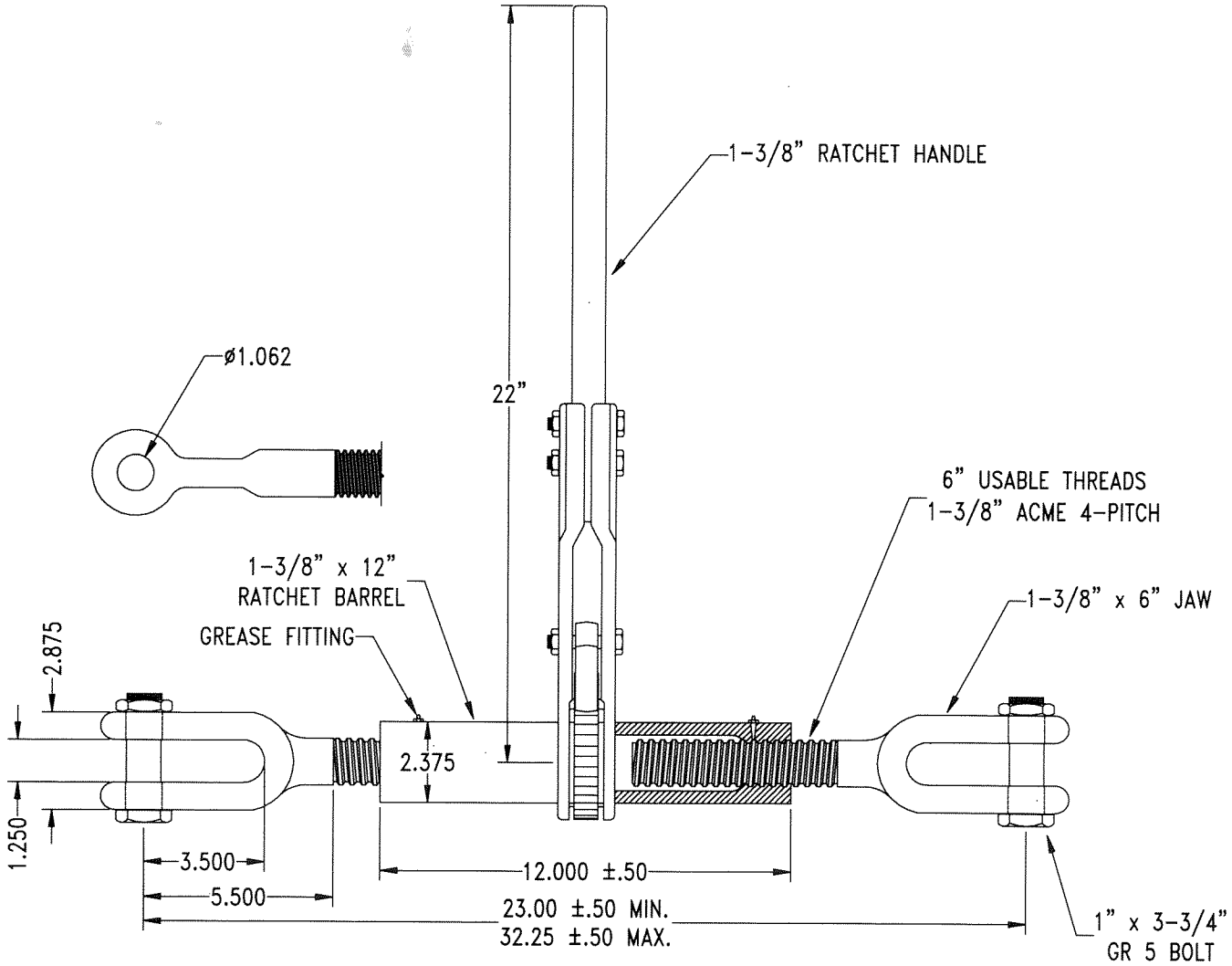

NOTES:

(1.) FINISH: PRIMER

REV	DESCRIPTION	DATE	DRAWN	APPR.	APPR.
B	REVISED JAWS & MIN & MAX	4/18/00	AT		
A	ORIGINAL DRAFT – PT39529	4/18/00	AT		

DIXIE INDUSTRIES
Chattanooga, TN

THESE DRAWINGS AND SPECIFICATIONS ARE THE PROPERTY OF DIXIE IND. AND SHALL NOT BE REPRODUCED OR COPIED OR USED AS BASIS FOR MANUFACTURE OR SALE OF EQUIPMENT OR DEVICES WITHOUT WRITTEN PERMISSION.

TITLE			
RATCHET ASSEMBLY 1-3/8" x 12" DA W/W w/GF			
DATE 4/18/2000	DWG NO. PT37755	PART NO. 37755	MATERIAL –
SCALE 1 = 1		SIZE A	SHEET 1 OF 1