CUSTOMER PRINT AUTHORIZATION
REQUIRED FOR PRODUCTION

SIGN DATE
CUSTOMER APPROVED PRINT

DIXIE INDUSTRIES
A DIVISION OF
COLUMBUS MCKINNON
1-800-933-4943 EXT. 290

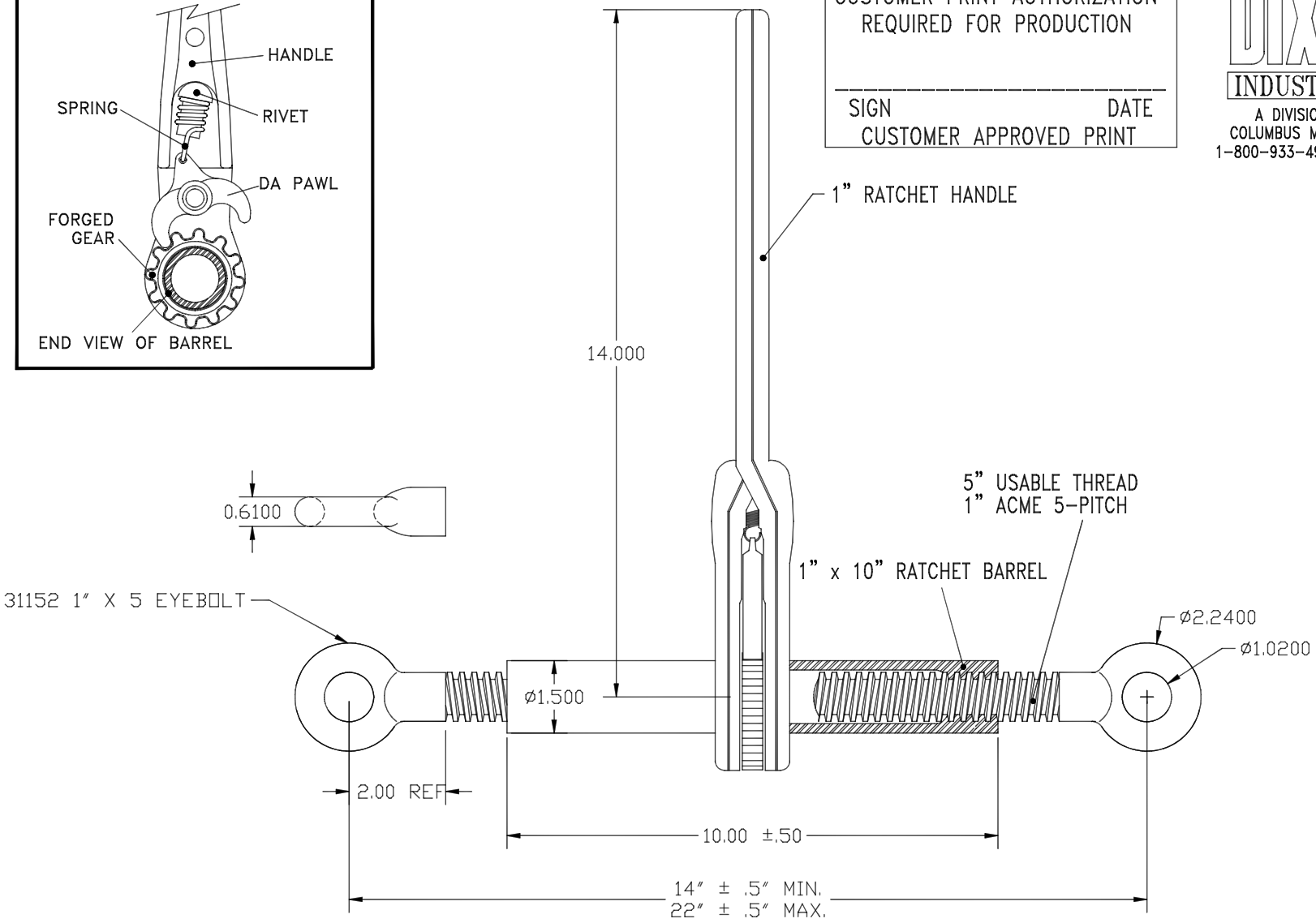

WLL 13000 LBS
FINISH- POWDER COAT RED
FORGING TOLERANCES ± .031"

REV	DESCRIPTION	DATE	DRAWN	APPR.	APPR.
A	ORIGINAL DRAFT	01/29/08	TR		

DIXIE INDUSTRIES
Chattanooga, TN

THESE DRAWINGS AND SPECIFICATIONS ARE THE PROPERTY OF DIXIE IND. AND SHALL NOT BE REPRODUCED OR COPIED OR USED AS BASIS FOR MANUFACTURE OR SALE OF EQUIPMENT OR DEVICES WITHOUT WRITTEN PERMISSION.

TITLE: RATCHET ASSEMBLY
1" x 10" DA F/F

DATE	DWG NO.	PART NO.	MATERIAL
01/29/08	48363	48363	–

SCALE: NTS | SIZE: A | SHEET 1 OF 1